DRIVE TRAIN, HALF SHAFT, FRONT - Z26S4D92AN/AH/BN/BH (C703007)

2026 RZR - RZR PRO S4 ULTIMATE (R01) - Z26S4D92AN/AH/BN/BH

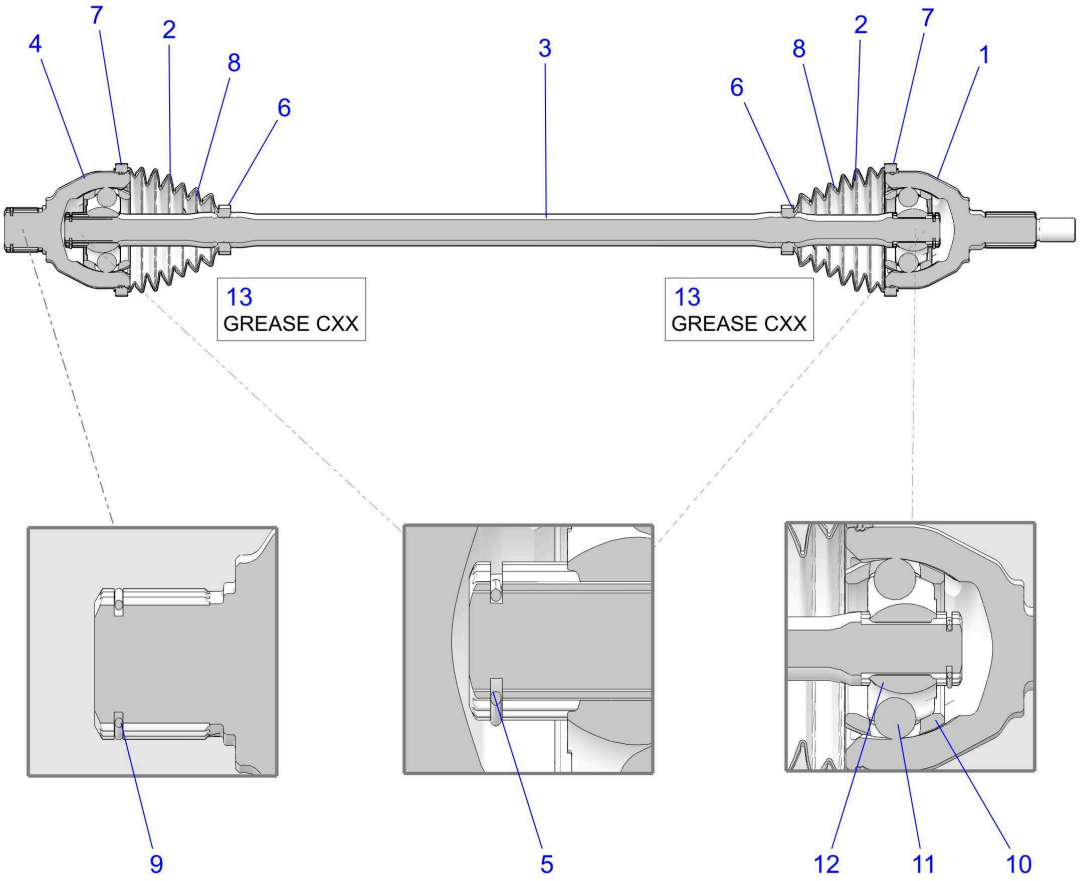

© 2021 Polaris Industries Inc.

C703007

Reference #	*Part#*	*Description*	*Quantity*
	1334560	ASM-HALFSHAFT,FRONT,CV-CV,74 [INCL. ALL]	1
1	3239268	OB JOINT [INCL. 10-12]	1
2	3239269	KIT, BOOT [INCL. 6-9]	1
3	3239270	BAR [INCL. 5]	1
4	3239271	IB JOINT [INCL. 10-12]	1
5	3236516	CIRCLIP	2
6	-------	SMALL CLAMP	2
7	-------	LARGE CLAMP	2
8	-------	BOOT	2
9	3239272	RING	1

10	-------	CAGE	2
11	-------	BALL	12
12	-------	INNER RACE	2
13	3236525	GREASE	1

Copyright 1996-2026 Polaris Industries U.S.A All rights reserved.